Exam Date & Time: 29-Nov-2024 (09:30 AM - 12:30 PM)

# MANIPAL ACADEMY OF HIGHER EDUCATION

**THIRD SEMESTER B.TECH. (ELECTRONICS & COMMUNICATION ENGINEERING) EXAMINATIONS - NOVEMBER / DECEMBER 2024**
**SUBJECT: ECE 2121/ECE_2121- ANALOG ELECTRONIC CIRCUITS**

**ANALOG ELECTRONIC CIRCUITS [ECE 2121]**

**Marks: 50** **Duration: 180 mins.**

**A**

**Answer all the questions.**

**Missing data may be suitably assumed.**

1A) Design the circuit of Fig. 1A such that M1 operates 100 mV away from the triode region while providing a voltage gain of 4. Assume a power budget of 2 mW. Assume $\mu_n C_{ox} = 200\ \mu A/V^2$, $V_{TH} = 0.4$ V, $\lambda$=0. (4)

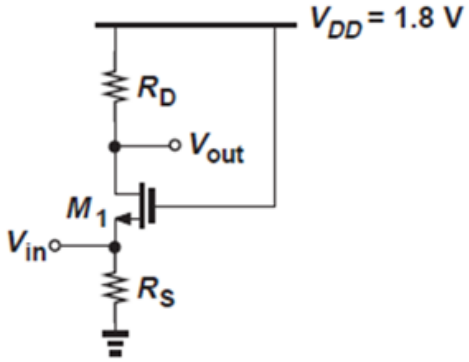


Fig. 1A

1B) Determine the value of W/L in Fig. 1B that places M1 at the edge of saturation and calculate the drain voltage change for a 1-mV change at the gate. Assume $V_{TH} = 0.4$V, $\lambda$=0, $\mu_n C_{ox} = 200\ \mu A/V^2$. (3)

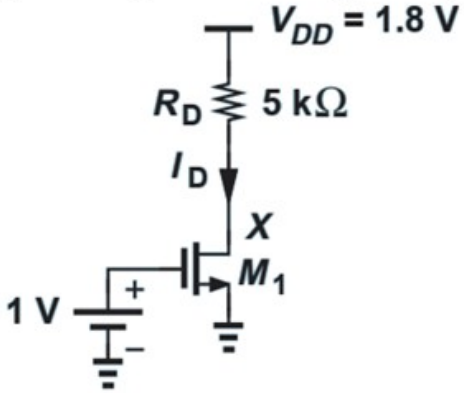


Fig. 1B

1C) (3)

The cascode current source shown in Fig. 1C must be designed for a bias current of 0.5 mA. Assume $\mu_n C_{ox} = 100\ \mu A/V^2$ and $V_{TH} = 0.4$ V. Assuming $\lambda = 0.1\ V^{-1}$, calculate the output impedance of the circuit.

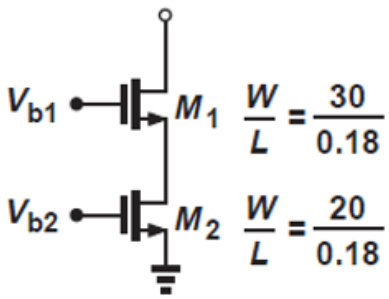


Fig. 1C

2A) Design an NMOS differential pair for the circuit shown in Fig. 2A for a voltage gain of 3 and a power budget of 1mW subject to the condition that the stage following the differential pair requires an input CM level of at least 1.2 V. Assume μnCox = 100 μA/V2, λ = 0, and VDD = 1.8 V. (4)

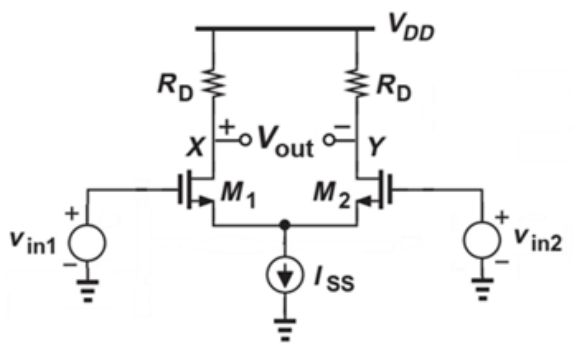


Fig. 2A

2B) Calculate Icopy in the circuit shown in Fig. 2B if IREF =0.45 mA. Assume all of the transistors operate in saturation and λ = 0. (3)

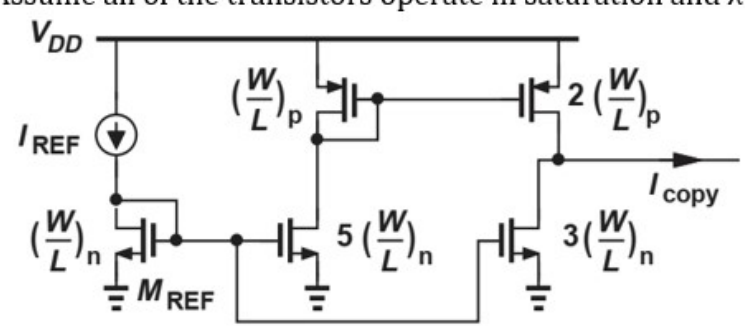


Fig. 2B

2C) (3)

In the circuit shown in Fig. 2C, assume M1 is in saturation and RD = 2.5 kΩ and compute (a) the maximum allowable value of W/L and (b) the minimum allowable value of RS (with W/L = 5/0.18). Assume λ = 0, μnCox = 200 μA/V2, VTH = 0.4 V.

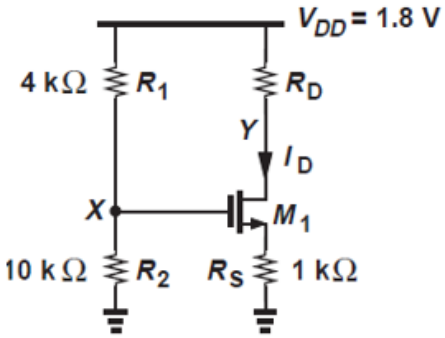


Fig. 2C

3A) Determine the expression of single-ended differential voltage gain for the circuit shown in Fig. Q3A. Assume perfect symmetry and λ ≠ 0. (4)

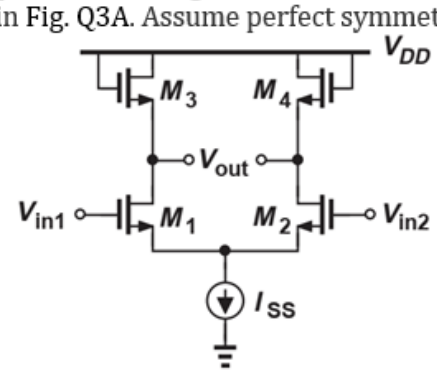


Fig. Q3A

3B) The CS stage shown in Fig. Q3B has $R_S$ = 200 Ω, $C_{GS}$ = 250fF, $C_{GD}$ = 80fF, $C_{DB}$ = 100fF, $g_m$ = (150 Ω) $^{-1}$, λ = 0 and $R_L$ = 2KΩ. Find the input, output pole frequencies and sketch its frequency response. (3)

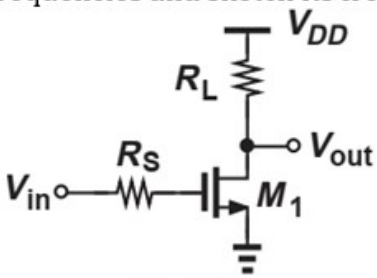


Fig. Q3B

3C) (3)

For the circuit shown in Fig. Q3C, find the poles at low frequencies. Also, sketch its low frequency response. Assume $\lambda = 0$.

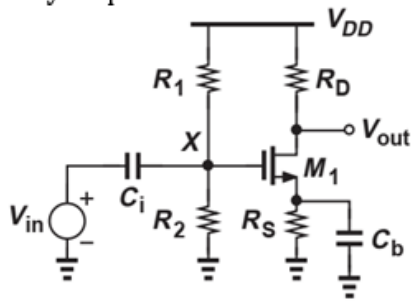


Fig. Q3C

4A) For the circuit shown in Fig. Q4A, find the input and output poles at high frequencies for $\lambda = 0$. Sketch the frequency response. (4)

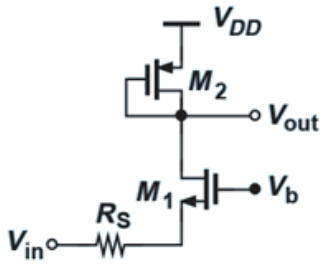


Fig. Q4A

4B) Find the polarity of feedback for the circuits shown in Fig. Q4B. Show the relevant steps involved in the analysis. (3)

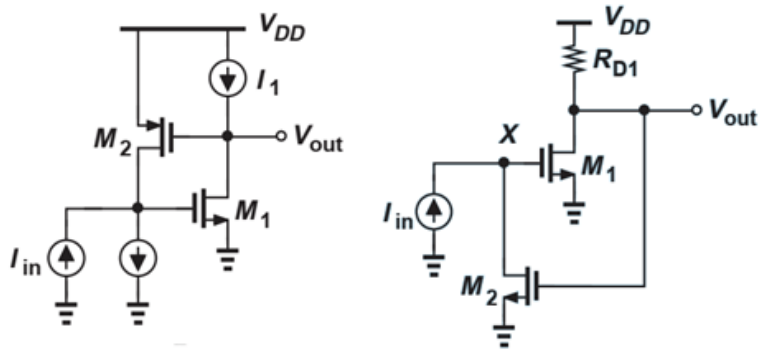


Fig. Q4B

4C) For the circuit shown in Fig. Q4C,
a) Obtain an expression for the transfer function of each stage.
b) Write the expression for the overall transfer function.
c) Obtain an expression for the oscillation frequency. (3)

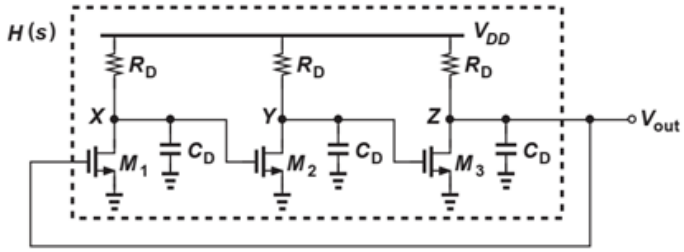


Fig. Q4C

5A) (4)

Determine the closed-loop gain, closed-loop input impedance, and closed-loop output impedances for the circuit shown in Fig. Q5A. Consider I/O effects (Loading Effect). Assume λ=0 for both $M_1$ and $M_2$.

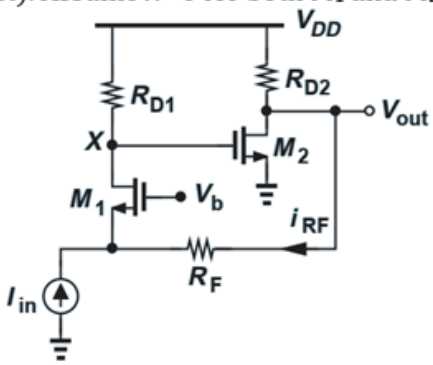


Fig. Q5A

5B) Determine the expression for % efficiency in Class - B Push - Pull power amplifier and also find its maximum efficiency. (3)

5C) Explain the working principle of the ring oscillator with a neat circuit diagram. Obtain the expressions for minimum gain and frequency of oscillation. Also, determine the frequency of oscillation for the drain resistance and load capacitance of 10KΩ and 1μF respectively. (3)

-----End-----